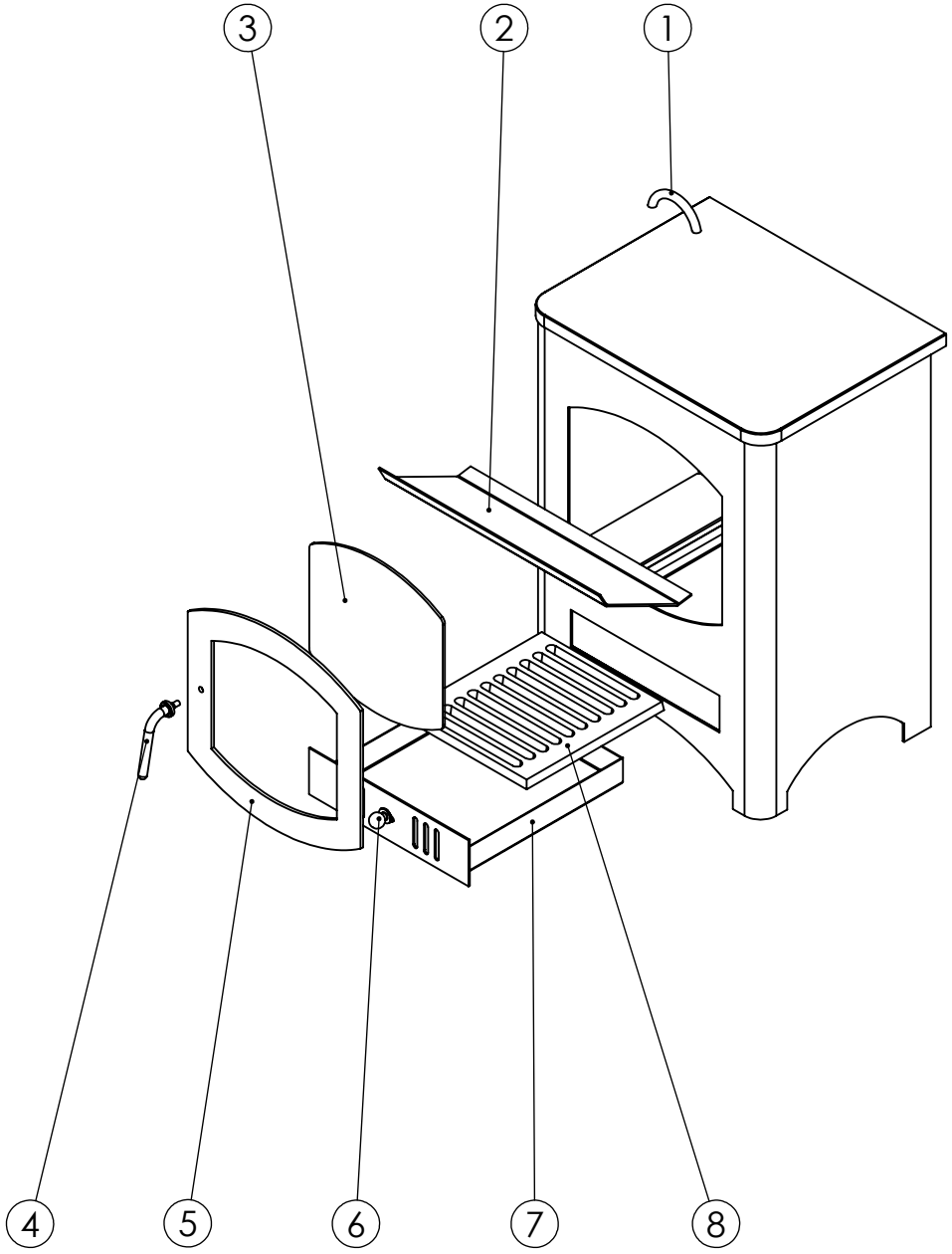


| N.º | DENOMINACIÓN | UD |
|---|---|---|
| 1 | Asa | 1 |
| 2 | Cortafuegos | 1 |
| 3 | Cristal | 1 |
| 4 | Manilla | 1 |
| 5 | Puerta | 1 |
| 6 | Tiro | 1 |
| 7 | Cajón | 1 |
| 8 | Parrilla | 1 |

PANADERO | Despiece BRIC-50